LONGi



Installation Manual for
LONGi Solar PV Modules

V19

Applicable Module Type			Certification Status	Module Structure
Mono-facial Module	LR5-54HPH-xxxM*	/	IEC、UL	Single Glass
	LR5-54HPB-xxxM*	/	IEC、UL	Single Glass
	LR5-54HNB-xxxM*	LR5-72HPH-xxxM	IEC、UL	Single Glass
	LR5-54HTH-xxxM*	LR5-72HPH-xxxM*	IEC、UL	Single Glass
	LR5-54HTB-xxxM*	LR5-72HTH-xxxM	IEC、UL	Single Glass
	LR5-66HPH-xxxM	LR5-72HTH-xxxM*	IEC、UL	Single Glass
	LR5-66HTH-xxxM	LR5-72HTHF-xxxM*	IEC、UL	Single Glass
	/	LR7-72HTH-xxxM*	IEC	Single Glass
	/	LR7-72HTHF-xxxM*	IEC	Single Glass
Bifacial Module	LR5-54HABB-xxxM*	LR5-72HBD-xxxM*	IEC、UL	Double Glass
	LR5-66HBD-xxxM	LR5-72HGD-xxxM*	IEC、UL	Double Glass
	LR5-54HTD-xxxM*	LR7-72HGD-xxxM*	IEC、UL	Double Glass
	LR8-66HGD-xxxM*	LR5-72HTD-xxxM	IEC、UL	Double Glass
	/	LR5-78HBD-xxxM*	IEC、UL	Double Glass
	/	LR5-72HTD-xxxM*	IEC	Double Glass
	/	LR5-72HTDR-xxxM*	IEC	Double Glass
	/	LR7-72HTD-xxxM*	IEC	Double Glass
	/	LR7-72HTDR-xxxM*	IEC	Double Glass

[1] The "*" identifier behind the module model indicates that the height of the module frame is 30mm.

[2] LR4-xxx-xxxM module and LR5-xxxHIH/HIB/HIBB/HIBD-xxxM module installation load and certification information are shown in the V16 version of LONGi PV Module Installation Manual.



Safety Note

- This manual elaborates on installation and safety use information for PV power generating modules (hereinafter referred to as module) of LONGi Solar Technology Co., Ltd. (hereinafter referred to as LONGi). Please abide by all safety precautions in this guide and local regulations.
- Installation of modules requires professional skills and knowledge and is to be carried out by qualified personnel. Please read this manual carefully before installing and using this module. Installation personnel shall get familiar with mechanical and electrical requirements of this system. Please keep this manual readily available as reference for future maintenance or upkeep or for sales and testing or handing of modules.
- If you have any doubts, please contact LONGi customer service personnel for further interpretation.

Contents

3	1 / Introduction
3	2 / Laws and Regulation
4	3 / General Information
4	3.1 Modules Identification
6	3.2 Junction box style and wiring method
6	3.3 Regular Safety
7	3.4 Electrical Performance Safety
8	3.5 Operation Safety
8	3.6 Fire Safety
9	4 / Installation Conditions
9	4.1 Installation Site and Working Environment
10	4.2 Selection of Tilt Angles
11	5 / Mechanical Installation
11	5.1 Regular Requirements
11	5.2 Module Mechanical Installation
12	5.2.1 Bolts Mounting
13	5.2.2 Clamp Mounting
14	5.3 Installation and Mechanical Load of Mono-facial Module
16	5.4 Bifacial module Mechanical Installation
20	6 / Electrical installation
20	6.1 Electrical Performance
20	6.2 Cables and Wiring
21	6.3 Connector
21	6.4 Bypass diode
21	6.5 PID Protection and Inverter Compatibility
22	7 / Grounding
23	8 / Operation and maintenance
23	8.1 Cleaning
24	8.2 Module Appearance Inspection
24	8.3 Inspection of Connectors and Cables
24	9 / Release and execution

1 Introduction

Electrical and mechanical installation information will be introduced in this installation manual, so please read and understand the information before installing LONGi modules. In addition, this manual also contains important safety information that you should be familiar with. All contents in this manual are intellectual properties of LONGi which originates from long term of technical exploration and experience accumulation of LONGi.

This installation manual does not entail any explicit or implicit quality warranty and does not stipulate on compensation schemes for losses, module damages or other costs caused by or related to module installation, operation, utilization and maintenance process. When there is a dispute between the parties about the root -cause of module damagethe judgment is based on the quality standards as per contract.

LONGi will not take any responsibility if patent rights or the third party rights are infringed by use of modules. LONGi reserves the rights for modifying product manual or installation manual without advanced notice. It is recommended to visit our website regularly at www.longi.com for the latest version of this installation manual.

If customers fail to install modules as per requirements set forth in this manual, the limited warranty provided for customers will be invalid. In addition, suggestions in this manual are to improve safety of module installation, which are tested and proved through years of experience. Please provide this manual to PV system users for reference and inform the advises on operation, maintenance requirements etc.



2 Laws and Regulation

The mechanical and electrical installation of photovoltaic modules should comply with national laws, local regulations and industry standards, including the requirements of the Safety Production Law, Environmental Protection Law, national standards and electricity specifications, to ensure the human safety of people and the photovoltaic module system. The specific implementation standards are mainly based on the requirements of the authority where the project is located.

3 General Information

3.1 Modules identification

Three labels on the module contain the information below:

1. Nameplate: product type, rated power, rated current, rated voltage, open circuit voltage, short circuit current under testing conditions, certification indicator, maximum system voltage, etc.

2. Current classification label: Rated working current.(H indicates High, M indicates Medium, L indicates Low).

3. Serial Number label: A unique serial number which is laminated inside the module permanently which can be found in the front of the module. There is another same serial number beside the module nameplate.

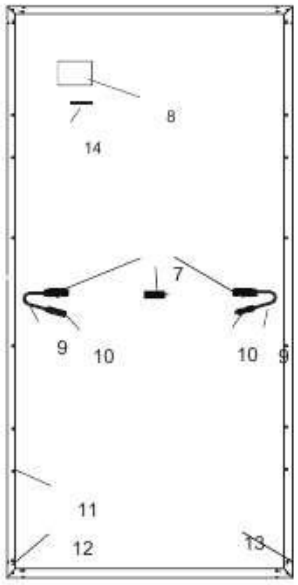

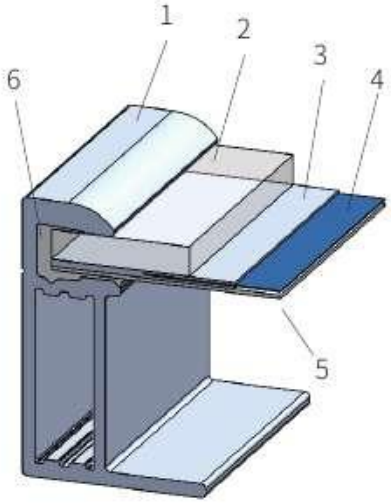



1 Frame	2 Glass	3 EVA	4 Solar Cell
5 Backsheet	6 Silica Gel	7 Junction Box	8 Name Plate
9 Cable	10 Connector	11 Mounting Hole	12 Grounding Hole
13 Drain Hole	14 Bar Code		

Figure 1 Typical Mechanical Drawing of Mono-facial Modules, Frame detail

(Please refer to section 3.2 for the location of the junction box. The specific version is subject to the corresponding specification.)

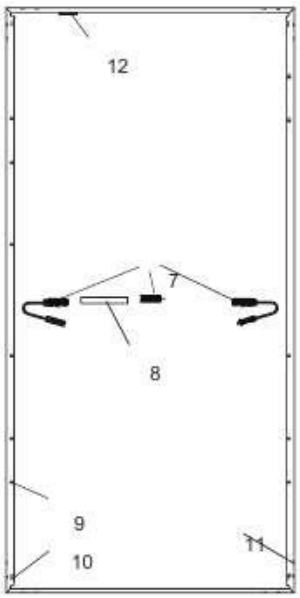

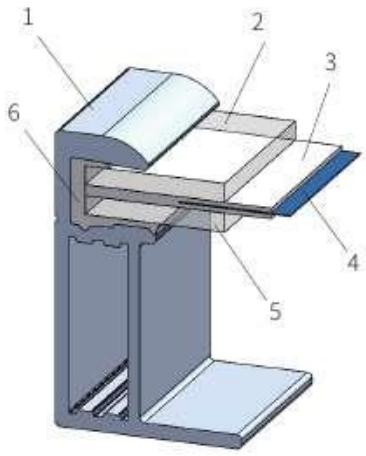

Bifacial Modules (With Frame)

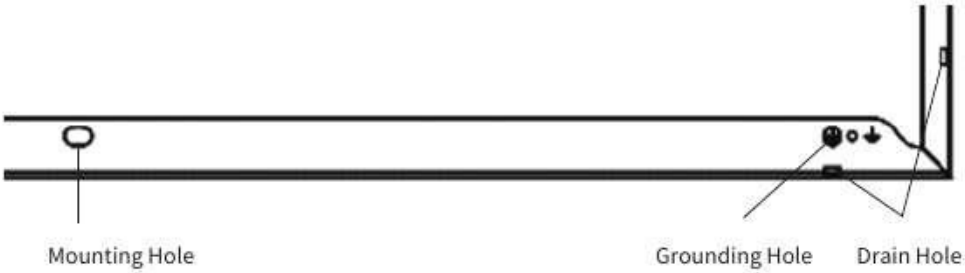

1	Frame	2	Front Glass	3	EVA/POE	4	Solar Cell
5	Back Glass	6	Sealant	7	Junction Box	8	Name Plate
9	Mounting Holes	10	Grounding Holes	11	Drain Holes	12	Bar Code

Figure 2 Typical Modules Mechanical Drawing of Bifacial Modules,Frame details

(Please refer to section 3.2 for the location of the junction box. The specific version is subject to the corresponding specification.)



3.2 Junction box style and wiring method

Junction Box Location	Recommended Wiring Method
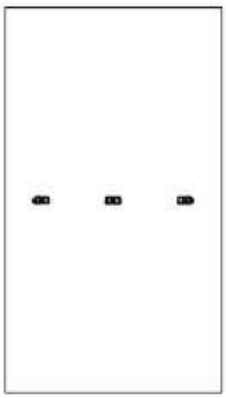	Portrait Installation: Standard Cable length 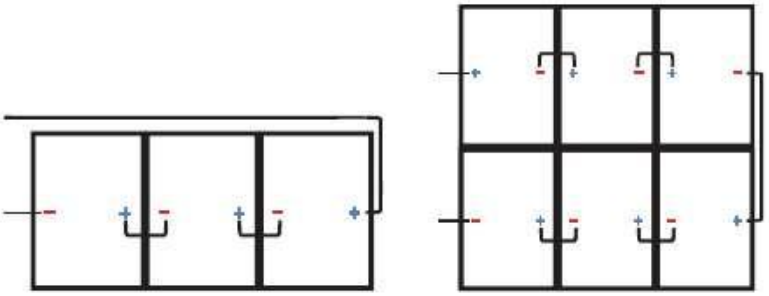 Note: The extra extended cable is required for connection at the turn-back corner of wiring as shown below.
	Landscape Installation: 54/66 type PV module cable length ≥1.2m, 72 type PV module cable length ≥1.4m, 78 type PV module cable length ≥1.5m, LR8-66 type PV module cable length ≥1.4m 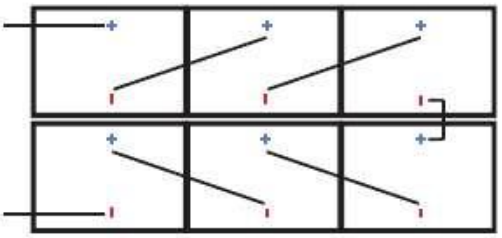
	Portrait installation: The adjacent modules in the same row need to be rotated 180 degrees for Leap-frog installation. 54/66 type PV module cable length ≥1.2m. 72 type PV module cable length ≥1.4m. 78 type PV module cable length ≥1.4m. LR8-66 type PV module cable length ≥1.4m 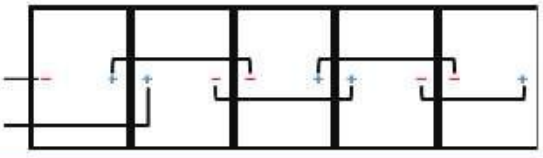

Figure 3 Bolt Installation of Mono-facial Modules



3.3 Regular Safety

The application level of LONGi Solar module is Class Ⅱ, which can be used in systems operating at > 50 V DC or >240 W, where general contact access is anticipated;

When the modules are for rooftop application, it is necessary to take the overall fire rating of the finished structure as well as operation and maintenance into account. The roofing PV system shall be installed after being evaluated by construction experts or engineers and with official analysis results for the entire structure. It shall be proved capable of supporting extra weight of system racking structures and PV modules.

For your safety, please do not work on the roof without required safety PPE(Personal Protective Equipment) which includes but not limited to fall protection, ladder or stair and personal protective measures.

For your safety, please do not install or handle modules in unsafe conditions including but not limited to strong wind or gust, damp or sandy roofs.



3.4 Electrical Performance Safety

PV modules can produce DC current under sunlight. Any contact of exposed metal at module's wiring parts may result in electrical shock or burn. Any contact of 30V or larger DC Voltage can be fatal.

In case of no connected load or external circuits, modules can still produce voltage. Please use insulation tools and wear rubber gloves when operating modules in the sunlight.

No switch is on the PV modules. Operating of PV modules can only be stopped when they are kept from sunlight or covered by hard board or UV-proof materials.

To avoid electric arc or electric shock hazards, please do not break down electric connection in loaded conditions. Incorrect connections will also lead to electric arc or shock. Keep connectors dry and clean and make sure that they are in good operating condition. Do not insert other metals into the connectors or carry out electric connection by whatever means.

Snow, water or other reflective medium in surrounding environments that intensify light re-flection will increase output current and power. And module voltage and power will increase under low temperature condition.

If module glass or other sealing materials are damaged, please wear PPE(personal protective equipment) and then isolate modules from the circuit.

Do not operate when modules are wet unless you wear PPE(personal protective equipment). Please follow the cleaning requirements in this manual when cleaning modules.

temperature oil, Engine oil such as KV46 , Grease such as Molykote EM-50L , Lubricating oil, Rust-proof oil, Stamping oil, Diesel, Cooking oil, Acetone, alcohol, release agent such as Pelicoat S-6 , adhesive sheets that can generate oxime gas and potting glue such as KE200 CX-200 chemlok , TBP, cleaning agent etc



3.5 Operation Safety









- Open modules outer package when installation.
- Do not damage the package and do not drop packaged modules on the ground.
- Do not exceed the indicated maximum layer limit on the packaging carton when piling modules up.
- During the reversing handling of the module, make sure that the module connector is always on the inside of rear frame to prevent the connector from being squashed.
- Before unpacking, please place the modules in a ventilated, dry, and rainproof site, avoid direct outdoor exposure and accompany with shading/rain shelter facilities. If it require a long term storage, please do not remove the original packaging and ensure that the original packaging is intact.
- Standard storage is recommended; Especially for long-term storage, standard warehouses should be used.
- Outdoor storage: waterproof facilities are requiredAssociate with waterproof and moisture-proof materials.The storage environment should be kept away from water sources and weeds, and the ground should be kept dry and well drained. On rainy days, use a rain cloth to completely cover the outer packaging of the module; Remove the rainproof cloth when there is sunlight or wind to dry the outer packaging as soon as possible to avoid long-termmoisture.
- Follow unpacking instructions when opening packaging carton.
- The aluminum alloy frame of the bracket or module of the photovoltaic system may has sharp edges, so the staff should wear appropriate protective clothing and safety helmets to avoid bumps or scratches to the personnel. Avoid hooks, straps, threads, and other parts that can cause stumbling on the clothing or tools you are wearing.
- Carrying modules with the junction box or wires are strictly forbidden.
- Do not stand or walk on modules.
- To avoid glass damage, heavy objects are not allowed on modules.
- Be careful when placing modules at corners in particular.
- Do not try to dismantle the module or remove nameplate or parts of modules.
- Do not paint or apply any other adhesive on modules.
- Do not damage or scratch backsheet of modules.
- Do not drill holes on the frame of module, which may reduce frame loading capacity and lead to frame corrosion and invalidation of the limited warranty provided for customers.
- Do not scratch anodic coating of aluminum alloy frame except for grounding connection. Scratch may lead to frame corrosion and reduce frame loading capacity and long-term reliability.
- Do not repair problematic modules on your own.



3.6 Fire Safety

Please refer to local laws and regulations before installing modules and abide by requirements on building fire protection.
According to the corresponding certification standards, the fire rating of LONGi Mono-facial modules is UL Type 1 or 2 or IEC Class C, the fire rating of LONGi bifacial modules is UL Type 29 or IEC Class C.
The roof should be coated by a layer of fireproof materials with suitable fire protection rating for roofing installation and make sure that the back sheet and the mounting surface are fully ventilated.
Different roof structures and installation modes will affect fireproof performance of buildings. Improper installation may lead to the risk of fire.
If once a PV module is on fire, the inverter should be cut off urgently to reduce the spreading. Professionals should wear insulating boots and insulating gloves with corresponding protection levels, and use a photovoltaic connector removal wrench to cut off the wires connecting the terminals of the firing modules. Notify the all people to evacuate urgently, and at the same time call the fire department for help. Before waiting for the fire department to arrive, a simple extinguishing can be carried out with a dry powder or fire sand.
To guarantee roof fire rating, the distance between module frame and roof surface must be ≥10cm.
Adopt proper module accessories such as fuse, circuit breaker and grounding connector according to local regulations.
Please do not apply modules in where exposed inflammable gases are nearby.

4 Installation Conditions

4.1 Installation Site and Working Environment

- The modules cannot be used in space
- Do not manually focus sunlight with mirrors or magnifying glass onto modules.
- LONGi modules shall be installed on proper buildings or other appropriate places (such as ground, garage, building outer wall, roof, PV tracking system) but shall not be installed on any vehicles.
- Do not install modules at places that are possible to be flooded.
- LONGi suggests that modules be installed in the working environment with the temperature of -40℃ to 40℃ of which is the monthly average highest and lowest temperature of the installation sites. The extreme working environment temperature for modules is -40℃ to 85℃.
- Make sure that installed modules do not suffer wind or snow pressure that exceeds the permissible maximum load limit.
- Modules shall be installed in places free from shadows throughout the year. Make sure there are no light-blocking obstacles in the installation sites.
- Carry out lightning protection for modules installed in places with frequent lightning and thunder.

- Do not install modules in places with possible inflammable gases.
- Modules cannot be used in environments with too much hails, snows, flue gas, air pollution and soot or in places with strong corrosive substances such as salt, salt mist, saline, active chemical steam, acid rain, or other substances corroding modules, affecting modules' safety or performance.
- Please take protective measures to ensure reliable and safe installation of modules in severe environments such as heavy snow, cold and strong wind or islands close to water and salt mist or deserts.
- LONGi modules passed the IEC 61701 salt spray corrosion test, but the corrosion may still occur where the modules frame is connected to the bracket or where the grounding is connected. LONGi modules can be installed ≥50 m away from the ocean side.

4.2 Selection of Tilt Angles

Tilt angle of PV modules refer to the included angle between module surface and horizontal ground. The module will obtain the maximum power output when directly facing the sunlight.

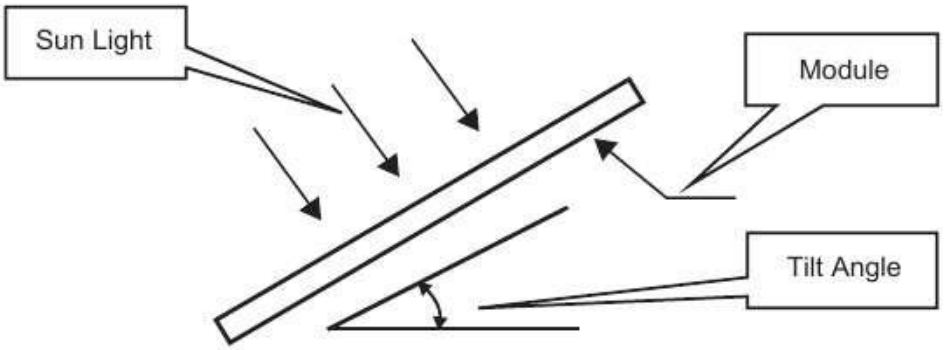

Modules are preferred to be south-facing in the north hemisphere and north-facing in the south hemisphere.
Please refer to standard modules installation guideline or suggestions from experienced PV module installer, for the specific installation angle.

LONGi suggests that tilt angle of module installation be no less than 10°, so module surface dust can be washed away easily by rainfall and frequency of cleaning can be reduced. And it is easy for accumulated water to flow away physically and avoid water mark on the glass surface which may further affect module appearance and performance.

LONGi modules connected in string should be installed with the same orientation and tilt angle. Different module orientation and tilt angle may result in different levels of solar irradiation and also power generation. In order to achieve the maximum annual generating capacity, the optimal orientation and inclination of PV modules in the installed area should be selected to ensure that sunlight can still reach to modules even on the shortest day of the year.

If LONGi modules are used in off-grid System, the tilt angle should be calculated based on seasons and irradiation to maximize the output power. If the modules output power meets the acquired load under the period of the worst irradiation in the year, the modules should be able to meet the load of the whole year. If the LONGi modules are used in grid-connected system, the tilt angle should be calculated based on the principle to maximize the yearly output power.

5 Mechanical Installation

5.1 Regular Requirements

- Make sure that installation method and mounting structure are solid enough to meet the expected load-bearing requirement, which is requisite assurance from PV system installer. Installation bracket system shall be tested and inspected by the third party testing institution with static mechanical analysis capacity in accordance with local national standards or international standards.
- Mounting structure shall be made from durable, corrosion resistant, UV-proof materials.
- Modules shall be fixed on the bracket solidly.
- In regions with heavy snowfall in winter, adjust the height of the mounting system so that the lower edge of the module is not covered by snow. Also, in order to reduce the risk of hot spots caused by flying sand and rocks damaging the module and shading, the lowest point of the module should be at a certain height to avoid the module being blocked by weeds and shrubs growing on the ground.
- If modules are installed on brackets parallel to the roof , the minimum gap between the module frame and the roof/wall shall be 10cm which is good for air circulation to achieve better performance of module. Make sure the building is suitable for installation before installing modules on roof. Moreover, seal properly to prevent leakage.
- The module frames can encounter thermal expansion and cold contraction. So the minimum distance between two adjoining modules shall be no less than 10 mm (0.39 inch). The specific space interval can be calculated according to the actual installation tolerance and deformation of the mounting bracket.
- Ensure that the backsheet, the front and rear glass of the module will not directly touch the mounting bracket, building structure, and environmental foreign objects (such as stones), especially under the action of external force, which will cause damage to the packaging backsheet and glass, and therefore the product warranty is invalid.
- Maximum static load of the PV module is downforce 5400 Pa and uplift force 2400 Pa, which can vary from different mounting methods of the modules (please refer to the following installation guidance), the described load in this manual is for the test load.
- Note: on the basis of IEC 61215-2016 installation requirements, when computing the corresponding maximum design load, a safety factor of 1.5 need to be considered in compliance with the local laws or regulations. (Test load = design load *1.5 times safety factor)
- The modules can be installed in either landscape or portrait orientation. When installing the modules, be cautious not to block the drain hole of the frame.(* Note: In order for the modules to prevent dust accumulation, the anti-soiling modules must be mounted in portrait orientation.)

5.2 Module Mechanical Installation

Module and bracket system connection can be realized by mounting holes, clamps or embedded systems. Installation shall follow the demonstration and suggestions below. If installation mode is different, please consult LONGi customer service personnel and obtain approval. Otherwise, modules may be damaged and limited warranty will be invalid. (* Note: regarding to Anti-Soiling modules only, short edge design has applied on prevention of dust from accumulating on modules, therefore , do not install at the short edge.

For special solar farm application scenarios such as heavy wind loads, valleys and steep cliffs, the installation method needs to be reinforced, and it is recommended to use Oval Washer, Flange nuts, bolts and clamps used together, and other reinforcement installation methods. For specific enquiry, please consult LONGi's customer service.

5.2.1 Bolts Mounting

The LONGi's module has mounting holes matching M6 and M8 bolts. See Figure 4 for installation details and corresponding hole positions.

Mounting Diagram	Applicable for modules
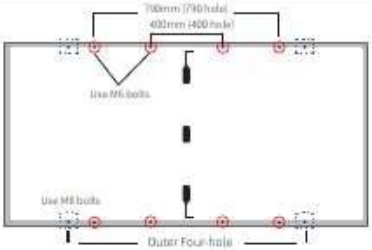	LR5-72HPH/HTH/HBD/HGD/HTHF/HTD/ HTDR-xxxM*and LR5-78HBD-xxxM*and LR7-72HGD/HTH/HTHF/HTD/HTDR-xxxM* and LR8-66HGD-xxxM*
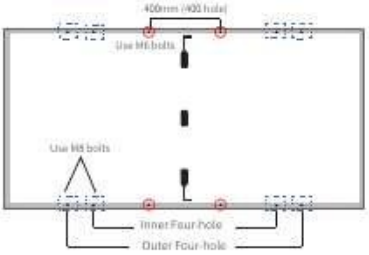	Other modules type

Note: ① 400 and 790 mounting holes are used for matching with the tracking bracket system products which are from manufacturers such as NEXTracker.
② Some modules do not have 400 mounting holes, please refer to the Product Datasheet for details.

Figure 4 Installation hole positions of Modules

Apply bolts to fix modules on the bracket through mounting holes on the back-side frame. See details in Figure 5.

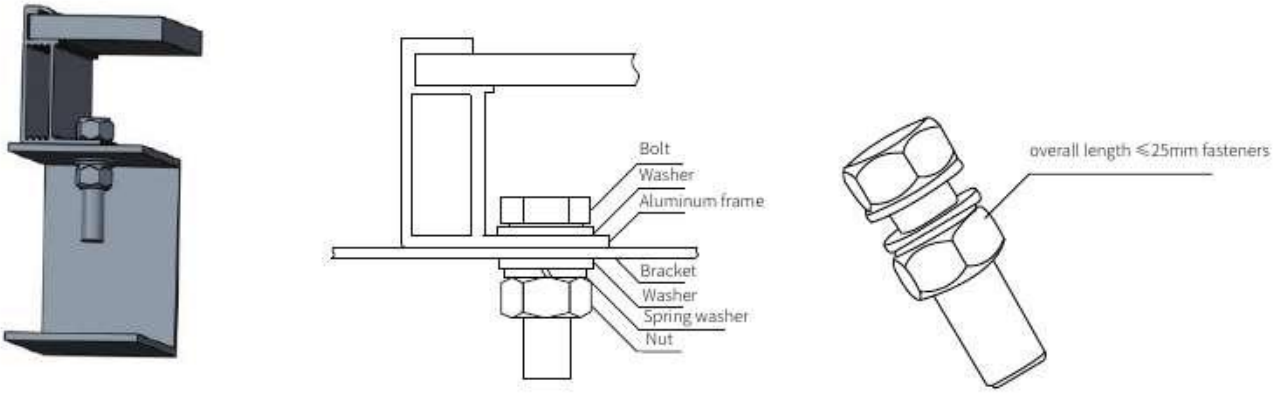

Figure 5 Bolt Installation of Modules

Recommended accessories are as below:

Accessories	Model		Material	Note
Bolt	M8	M6	Q235B/SUS304	Accessories material selection should be based on application environment.
Washer	2pcs, thickness ≥1.5mm and outside diameters=16mm	2pcs, thickness ≥1.5 mm and outside diameter = 12-18 mm	Q235B/SUS304	
Spring Washer	8	6	Q235B/SUS304	
Nut	M8	M6	Q235B/SUS304	

Suggestion :1 M8 bolt tightening torque range: 12-16 N•m;

M6 bolt tightening torque range: 8-12 N•m;

2 When using LONGi 30 mm height frame module, (Figure 5) it is recommended to select overall length ≤ 25mm fasteners. (If there is a special model, consult LONGi customer service personnel).

5.2.2 Clamp Mounting

The module can be mounted by a dedicated clamp, as shown in Figure 6.

Under no circumstances should the clamp touch the glass or deform the frame. The interface of the clamp to the front of the frame must be smooth and flat to prevent frame or other components from being damaged.

Make sure that these are no shadow caused by clamps.

The drain holes of module cannot be blocked by clamps.

For framed PV module, it is recommended that the length of the clamp be at least 50mm the clamp must maintain an overlap of 10-12 mm with the frame of the module (For clamp installation with an overlap of less than 10mm, LONGi technicians need to be consulted for assessment).

Regarding to the reference value of tightening torque, it is suggesting that for M8 bolt is 12 -16 N•mM6 is 8 -12 N•m.

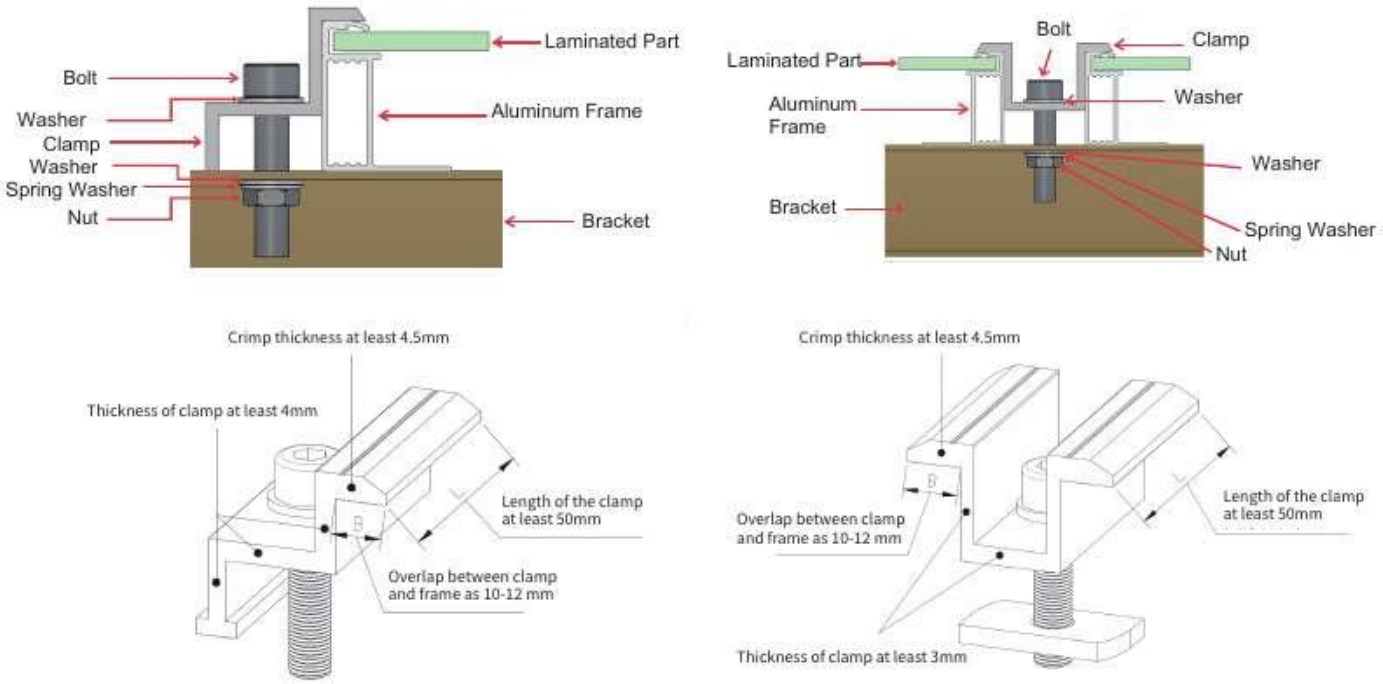

Figure 6 Clamp Installation of Modules

5.3 Installation and Mechanical Load of Mono-facial Module

Mono-facial modules can be mounted by bolts or clamps. The mounting method and maximum test load are shown as follow (The unit of distance and length in the table below is millimeter (mm), and the unit of pressure is Pascal (Pa)).

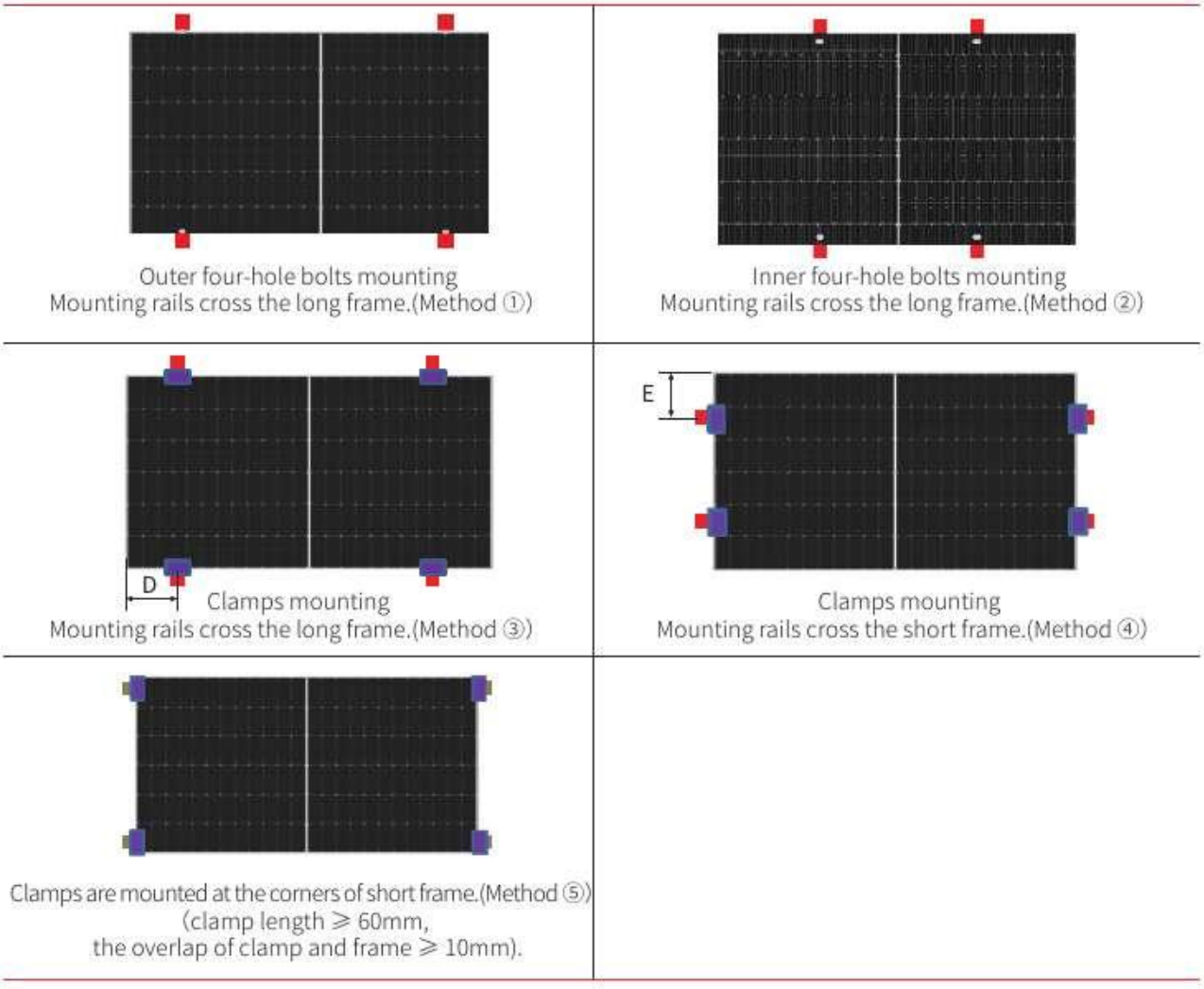

Figure 7 Mono-facial Module Installation Position

The maximum test load of framed mono-facial modules:

Module Type / Installation Method		Bolts Mounting		Clamps Mounting					
		Mounting rails cross the long frame		Mounting rails cross the long frame				Mounting rails cross the short frame	Clamps are mounted at the corners of short frame
		Outer Four-hole	Inner Four-hole	250 ≤D≤ 350	350 ≤D≤450	450 ≤D≤550	500 ≤D≤600	150 ≤ E ≤ 250	
		Method ①	Method ②	Method ③				Method ④	Method ⑤
54/66-cell Framed Mono-facial Modules	LR5-54HPH-xxxM*	±2400	+5400, -2400	+5400, -2400	/	/	/	±2400	+2400, -1800
	LR5-54HPB-xxxM*	±2400	+5400, -2400	+5400, -2400	/	/	/	±2400	+2400, -1800
	LR5-54HNB-xxxM*	±2400	+5400, -2400	+5400, -2400	/	/	/	±2400	+2400, -1800
	LR5-54HTH-xxxM*	±2400	+5400, -2400	+5400, -2400	/	/	/	±2400	+2400, -1800
	LR5-54HTB-xxxM*	±2400	+5400, -2400	+5400, -2400	/	/	/	±2400	+2400, -1800
	LR5-66HPH-xxxM	+5400, -2400	±2400	/	+5400, -2400	/	/	±1800	±1600
	LR5-66HTH-xxxM	+5400, -2400	±2400	/	+5400, -2400	/	/	+1800, -1400	+1600, -1400
72-cell Framed Mono-facial Module	LR5-72HPH-xxxM	+5400, -2400	±2400	/	/	+5400, -2400	/	/	/
	LR5-72HTH-xxxM	+5400, -2400	±2400	/	/	+5400, -2400	/	/	/
	LR5-72HPH-xxxM*	+5400, -2400	/	/	/	+5400, -2400	/	/	/
	LR5-72HTH-xxxM*	+5400, -2400	/	/	/	+5400, -2400	/	/	/
	LR5-72HTHF-xxxM*	+5400, -2400	/	/	/	+5400, -2400	/	Not Allow	Not Allow
	LR7-72HTH-xxxM*	+5400, -2400	/	/	/	/	+5400, -2400	/	/
	LR7-72HTHF-xxxM*	+5400, -2400	/	/	/	/	+5400, -2400	Not Allow	Not Allow

LONGi Mono-facial modules can be matched with the mainstream mounting systems in the industry. The test load of module with typical mounting systems are as follows. As for other special mounting systems which are not included in the table below, please consult LONGi customer service personnel.

Module Type	Compatible Support Brackets	Mounting Hardware	Test Load (Pa)
LR5-66HPH-xxxM	NEXTracker NX Horizon (1P)	Short RailV2.4 + Reinforcement 4×bobtails (M6 head O.D. 16.8 mm) (400mm holes position)	±2400
LR5-72HPH-xxxM LR5-72HTH-xxxM	NEXTracker NX Horizon (1P)	Short RailV2.4 + Reinforcement 4×bobtails (M6 head O.D. 16.8 mm) (400mm holes position)	±1800

The above data is based on the static load requirements of IEC61215 standard (Tested by LONGi or third party certification institution).

5.4 Installation and Mechanical Load of Bifacial module

Bifacial modules can be mounted by bolts or clamps. The mounting method and maximum test load are shown as follow. (The unit of distance and length in the table below is millimeter (mm), and the unit of pressure is Pascal (Pa)).

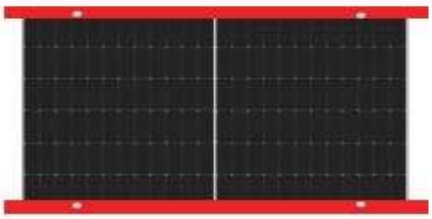

Outer four-hole bolts mounting(Method ①)
Mounting rails parallel the long frame.

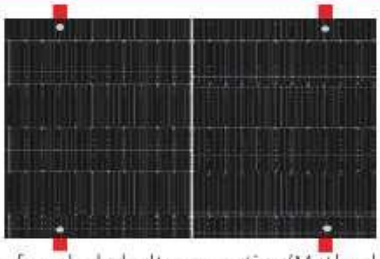

Outer four-hole bolts mounting(Method ②)
Mounting rails cross the long frame.

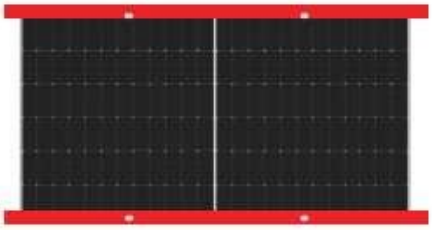

Inner four-hole bolts mounting(Method ③)
Mounting rails parallel the long frame.

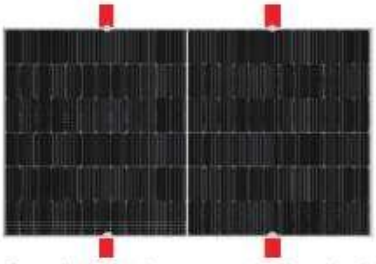

Inner four-hole bolts mounting(Method ④)
Mounting rails cross the long frame.

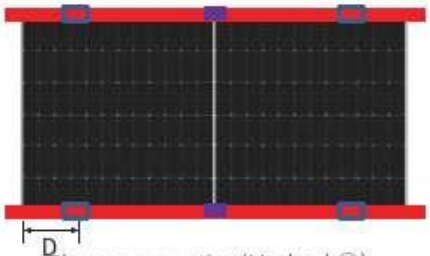

Clamps mounting(Method ⑤)
Mounting rails parallel the long frame.

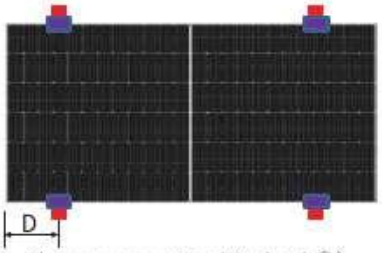

Clamps mounting(Method ⑥)
Mounting rails cross the long frame.

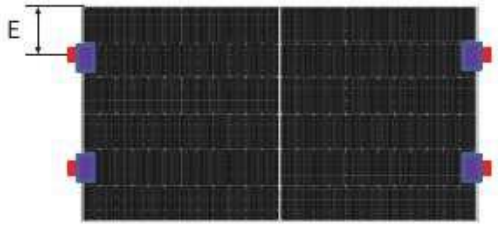

Clamps mounting(Method ⑦)
Mounting rails cross the short frame.

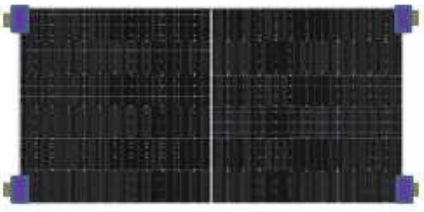

Clamps are mounted at the corners of short frame.(Method ⑧)
(clamp length ⩾ 60mm,
the overlap of clamp and frame ⩾ 10mm).

Figure 8 Bifacial Module Installation Position

Mechanical loads information of 54-cells with framed bi-facial dual glass modules

Module Type \ Installation Method		Bolts Mounting		Clamps Mounting		
		Mounting rails cross the long frame		Mounting rails cross the long frame	Mounting rails cross the short frame	Clamps are mounted at the corners of short frame
		Outer Four-hole	Inner Four-hole	250 ⩽ D ⩽ 350	150 ⩽ E ⩽ 250	
		Method ②	Method ④	Method ⑥	Method ⑦	Method ⑧
54-cell Framed Bifacial dual glass Module	LR5-54HABB-xxxM*	±2400	+ 5400, -2400	+ 5400, -2400	+2400, -1800	/
	LR5-54HTD-xxxM*	±2400	+ 5400, -2400	+ 5400, -2400	+2400, -2100	+2400, -1800

Mechanical loads information of 66/72/78-cells with framed bi-facial dual glass modules:

Module Type \ Installation Method		Bolts Mounting			Clamps Mounting					
		Mounting rails cross the long frame	Mounting rails parallel the long frame.		Mounting rails cross the long frame.			Mounting rails parallel the long frame.		
		Outer Four-hole	Outer Four-hole	Inner Four-hole	350 ⩽ D ⩽ 450	450 ⩽ D ⩽ 550	500 ⩽ D ⩽ 600	350 ⩽ D ⩽ 450	450 ⩽ D ⩽ 550	500 ⩽ D ⩽ 600
		Method ②	Method ①	Method ③	Method ⑥			Method ⑤		
72/66/78-cell Framed Bifacial Module	LR5-66HBD-xxxM	+ 5400, -2400	+ 3600, -2400	±2400	+ 5400, -2400	/	/	+ 3600, -2400	/	/
	LR5-72HBD-xxxM	+ 5400, -2400	+ 3600, -2400	±2400	/	+ 5400, -2400	/	/	+ 3600, -2400	/
	LR5-72HND-xxxM	+ 5400, -2400	+ 3600, -2400	±2400	/	+ 5400, -2400	/	/	+ 3600, -2400	/
	LR5-72HTD-xxxM	+ 5400, -2400	+ 3600, -2400	±2400	/	+ 5400, -2400	/	/	+ 3600, -2400	/
	LR5-72HBD-xxxM*	+ 5400, -2400	+ 3600, -2400	/	/	+ 5400, -2400	/	/	+ 3600, -2400	/
	LR5-72HGD-xxxM*	+ 5400, -2400	+ 3600, -2400	/	/	+ 5400, -2400			+ 3600, -2400	
	LR5-72HTD-xxxM*	+ 5400, -2400	+ 3600, -2400	/	/	+ 5400, -2400	/	/	+ 3600, -2400	/
	LR5-72HTDR-xxxM*	+ 5400, -2400	+ 3600, -2400	/	/	+ 5400, -2400			+ 3600, -2400	
	LR5-78HBD-xxxM*	+ 5400, -2400	+ 3600, -2400	/	/	/	+ 5400, -2400	/	/	+ 3600, -2400
	LR7-72HGD-xxxM*	+ 5400, -2400	+ 3600, -2400	/	/	/	+ 5400, -2400	/	/	+ 3600, -2400
	LR8-66HGD-xxxM*	+ 5400, -2400	+ 3600, -2400	/	/	/	+ 5400, -2400	/	/	+ 3600, -2400
	LR7-72HTD-xxxM*	+ 5400, -2400	+ 3600, -2400	/	/	/	+ 5400, -2400	/	/	+ 3600, -2400
	LR7-72HTDR-xxxM*	+ 5400, -2400	+ 3600, -2400	/	/	/	+ 5400, -2400	/	/	+ 3600, -2400

LONGi bifacial modules can be matched with the mainstream bracket systems in the industry. The matching test load is as follows (for other bracket systems matching information which are not specified or included in the table below, please consult LONGi customer service personnel).

Module Type	Compatible Support Brackets	Mounting Hardware	Test Load (Pa)
LR5-66HBD-xxxM	NEXTracker NX Horizon（1P）	Short Rail V2.4 4×bobtails (M6 head O.D. 16.8 mm) (400mm holes position)	±2400
LR5-72HBD-xxxM LR5-72HTD-xxxM	NEXTracker NX Horizon（1P）	Short RailV2.4 4×bobtails (M6 head O.D. 16.8 mm) (400mm holes position)	±2100
	ATI DuraTrack ™ HZ Tracking System（1P）	Hi-rise 300mm Clamp ① Drawing No: 20822	±1200
		Hi-rise 400mm Clamp Drawing No: 20834	±1200
		1400mm Rail Drawing No: 20916	±3600
	Arctech Horizontal Single-axis Tracker Skyline（1P）	450mm Rail M6 bolt+M6 plain washer (O.D.=18mm) Drawing No: 300010141 400mm holes position	±1800
		1040mm Rail M8 bolt+M8 plain washer(O.D.=16mm) Drawing No: 300010142 990mm holes position	±2400
		1450mm Rail M8 bolt+M8 plain washer(O.D.=16mm) Drawing No: 300010143 1400mm holes position	±3600
	PV Hardware Omega-400（1P）	428mm Rail M6 bolts+M6 washer(O.D.=18mm) Drawing No: MC_PR_Omega60x1_Oct_M6_S355_ZM310_400 400mm holes position	±1800
	Arctech Horizontal Single-axis Tracker Skysmart2（2P）	2786mm Rail 400mm holes: M6 bolt+M6 plain washer (O.D.=18mm) 990mm holes: M8 bolt+M8 plain washer (O.D.=16mm) Drawing No: SZ0598240 400+990mm holes position	+1800，-1600
		3376mm Rail + 900 Brace M8 bolt+M8 plain washer(O.D.=16mm) Drawing No:SZ0598340+ZC9001740 900mm holes position	+2200，-2000
		3786mm Rail + 900 Brace M8 bolt+M8 plain washer(O.D.=16mm) Drawing No:SZ0598440+SZ0598440 1400mm holes position	+2600，-2200
	Soltec SF7 Single-Axis Tracker（2P）①	2832mm rail M6 bolt+M6 plain washer (O.D.=18mm) Drawing No: SF7-MR-06-064 Rev.P00 400 + 1400mm holes position	±1800

Module Type	Compatible Support Brackets	Mounting Hardware	Test Load (Pa)
LR7-72HGD-xxxM* LR8-66HGD-xxxM*	NEXTracker NX Horizon（1P）	Short Rail V2.4 4×bobtails (M6 head O.D. 16.8 mm) （400mm holes position）	±2400
		V2.4 790mm rail 4×bobtails (M6 head O.D. 16.8 mm) （790mm holes position）	+3000，-2400
	STI H250（1P）	400mm Rail M6 Bolt+M6 plain washer(O.D.=18mm) Drawing No: STI29088 （400mm holes position）	±1800
		830mm Rail M6 Bolt+M6 plain washer(O.D.=18mm) Drawing No: STI29089 （790mm holes position）	±2100
		1440mm Rail M8 Bolt+M8 plain washer(O.D.=16mm) Drawing No: STI29091 （1400mm holes position）	+2800，-2400
	Arctech Horizontal Single-axis Tracker Skyline 2.5（1P）	450mmRail M6 Bolt+M6 plain washer(O.D.=18mm) Drawing No: 300010141 （400mm holes position）	±1800
		840mmRail M6 Bolt+M6 plain washer(O.D.=18mm) Drawing No:300021496 （790mm holes position）	±2100
		1450mmRail M8 Bolt+M8 plain washer(O.D.=16mm) Drawing No: 300010143 （1400mm holes position）	+3000，-2400
	PVH PVH_ Axone Duo（1P）	428mmRail （M6 Bolt+M6 plain washer(O.D.=18mm) Drawing No: PT00007413 （400mm holes position）	±1800
		818mmRail （M6 Bolt+M6 plain washer(O.D.=18mm) Drawing No: PT00007413 （400mm +790mm holes position）	±2100
		1428mmRail （400 holes position： M6 Bolt+M6 plain washer(O.D.=18mm 1400 holes position： M8 Bolt+M8 plain washer(O.D.=16mm) Drawing No: PT00007413 (400 holes)+ MC_PR_Rx1.5_M8_56.5_S350_Z275_1428（1400 holes） （400mm +1400mm holes position）	+3000，-2700
LR5-72HBD-xxxM* LR5-72HGD-xxxM*	NEXTracker NX Horizon（1P）	Short RailV2.4 4×bobtails (M6 head O.D. 16.8 mm) （400mm holes position）	±2400
		V2.4 790mm rail 4×bobtails (M6 head O.D. 16.8 mm) (790mm holes position)	+3000，-2400
	ATI DuraTrack ™ HZ Tracking System	Hi-rise 300mm Clamp[1] Drawing No: 20822	±1200
		Hi-rise 400mm Clamp[1] Drawing No: 20834	±1200
		400mm Rail M6 Bolt+M6 plain washer(O.D.=18mm) Drawing No: 21011 400mm hole position	±1800
		1400mm Rail Drawing No: 20916	+2800，-2400

Module Type	Compatible Support Brackets	Mounting Hardware	Test Load (Pa)
	Arctech Horizontal Single-axis Tracker Skyline（1P）	450mmRail M6 Bolt+M6 plain washer(O.D.=18mm) Drawing No: 300010141 400mm hole position	±1800
		840mmRail M6 Bolt+M6 plain washer(O.D.=18mm) Drawing No::300021496 790mm hole position	±2100
		1450mm Rail M8 Bolt+M8 plain washer(O.D.=16mm) Drawing No: 300010143 1400mm hole position	+3200，-2400
	PVH Omega(1P)	428mm Rail Drawing No: MC_PR_Omega60x1_Oct_M6_S355_ZM310_400 (M6 Bolt+M6 plain washer(O.D.=18mm) 400mm hole position	±1500
		818mm Rail Drawing No: MC_PR_60x1.5_Oct_M6_53_S350_ZM310_818 (M6 Bolt+M6 Plain washer(O.D.=18mm) 790mm hole position	±1800
		1428mmRail Drawing No: MC_PR_Omega80x1.5_Oct_M8_S355_ZM310_1400 (M8 Bolt+M8 Plain washer(O.D.=16mm) 1400mm hole position	+2800，-2400
	Soltec Omega(1P)	426mmRail Drawing No:SF1-MR-06-0xx_Dr_P00-50x30x25 L=426mm (M6 Bolt+M6 Plain washer(O.D.=18mm) 400mm hole position	±1500
		816mmRail Drawing No: SF1-MR-06-0xx_Dr_P00-50x30x25 L=816mm (M6 Bolt+M6 Plain washer(O.D.=18mm) 790mm hole position	±1800
		1426mmRail Drawing No: SF1-MR-06-0xx_Dr_P00-50x30x25 L=1426mm (M8 Bolt+M8 Plain washer(O.D.=16mm) 1400mm hole position	+2800，-2400
	GameChange(1P)	GC4318DXUH 470mm Speed clamp Drawing No: GC4318DXUH-470mm-.046/.053/.068-GXX-P	±1200
		GC4318DXUH 600mm Speed clamp Drawing No: GC4318DXUH-600mm-.046/.053/.068L-GXX-P	±1600

① LONGi recommends that the maximum torque value of bolts used at ATI Hi-rise 300mm should be 19 N•m.

LONGi's special modules for flexible racking can be matched and installed with industry flexible racking systems, and the matching test loads are as shown in the following table (for other unspecified bracket systems and LONGi products, please consult LONGi's customer service personnel).

Module Type	Compatible Support Brackets	Mounting Hardware	Test Load (Pa)
LR5-72HBD-xxxM*	Tian Zhi Jie flexible racking	2 cables flexible racking: M8 Bolt+ double hole washer 1300+1400mmhole position	+3600, -2400

① The above data is based on the static load requirements of IEC61215 standard (Tested by LONGi or third party certification institution).

6 Electrical installation

6.1 Electrical Performance

There are tolerances between the rated values of the electrical performance under STC and measured values. Including Isc, Voc and Pmax under STC (1000 W/m² Irradiance, a cell temperature of 25 ℃ and an AM1.5).

When modules are in series connection, the string voltage is sum of every individual module in one string. When modules are in parallel connection, the current is sum of the individual module as shown in below figure 9. Modules with different electric performance models cannot be connected in the same string.

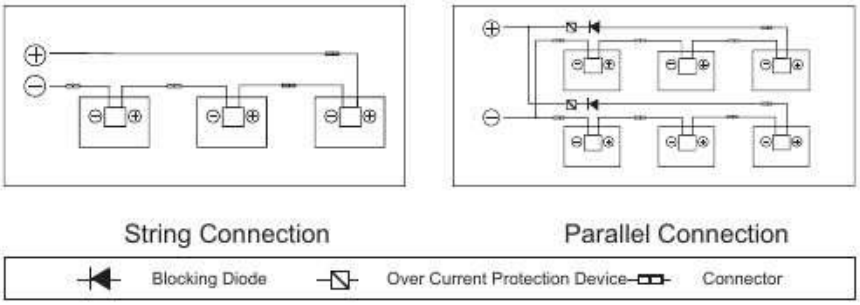

Figure 9 Series Connection and Parallel Connection Circuit Diagram

The maximum allowed quantity of modules in string connection shall be calculated according to relative regulations. The open circuit voltage value under the expected lowest temperature shall not exceed the maximum system voltage value allowed by modules and other values required by DC electric parts. (LONGi modules maximum system voltage is DC1000V/DC1500V---actually system voltage is designed based on the selected module and inverter model.)

The correction value of VOC can be calculated by the following formula.

C_{Voc}=1-βVoc×(25-T)

T: The expected lowest temperature of the installation site.

β: VOC temperature coefficient (% /℃) (Refer to module datasheet for further detail)

If there has reverse current exceeding the maximum fuse current flowing through the module, use overcurrent protection device with the same specifications to protect the module. If quantity of parallel connection is more than 2, there must be an overcurrent protection device on each string of module.



6.2 Cables and Wiring

PV Module's junction boxes with the IP67 protective level, can provide the safety protection for cable and wiring connection, also for contact protection of non-insulating electric parts. Each module has two individual wires connecting the junction box, one is negative pole and the other is positive pole. Two modules can be in series connection by inserting the positive pole at one end of wire of one module into the negative pole of the adjoining module.

According to local fire protection, building and electrical regulation, apply proper cable and connector; ensure the electrical and mechanical property of the cables (the cables should be put in a catheter with anti-UV aging properties, and if exposed to air, the cable itself should have anti-UV aging capability).
The installer can only use single-wire cable, ≥ 4mm² (12 AWG), 90 ℃ , with proper insulation capability to withstand the maximum open circuit voltage (such as EN50618 approval). Need to select appropriate wire specifications to reduce voltage drop.
LONGi requires that all wiring and electrical connections comply with the appropriate National Electrical Codes.
When cables are fixed on the bracket, avoid mechanical damaging cables or modules. Do not press cables by force. Adopt UV resistant cable ties and clamps to fix cables on the bracket. Though cables are UV resistant and water proof, it is still necessary to prevent cables from direct sun light and water immersion.
The minimum allowed bending radius of cables should be 43mm. (1.69 inch)

6.3 Connector

Please keep connectors clean and dry. Make sure connector caps are fastened before connection.
Avoid foreign objects such as moisture, dust, and organisms from entering the connector, which may cause the connector to fail to work properly or be damaged.
If the connector is wet, it is forbidden to connect.
If the connector is contaminated, it is forbidden to connect it.
If the connector is not connected positive with negative, the connector is not waterproof.
The components need to be connected as soon as possible after installation, and the connectors should meet the requirements of IP68 (IEC60529) after the connection. If the connector cannot be connected on time or the installation place is rainy and foggy, it is recommended to add a connector protection device.
Avoid connectors from direct sun light and water immersion.
Avoid connectors falling onto ground or roof. Incorrect connection may lead to electric arc and electric shock. Please make sure that all electric connection is reliable. Make sure all connectors are fully locked.
Do not connect different connectors (brand and model) together.

6.4 Bypass diode

LONGi solar module junction box contains bypass diode which is in parallel connection with the cell string. If hot spot occurred, the diode will come into operation to stop the main current from flowing through the hot spot cells in order to prevent module over-heated and performance loss. Note, a bypass diode is not the overcurrent protection device.
If the diode is definite or suspected to be defective, the installer or system maintenance supplier shall contact LONGi. Please do not try to open the module junction box on your own.



6.5 PID Protection and Inverter Compatibility

LONGi Solar PV modules pass the most stringent PID tests before leaving the factory, and the negative electrode of the module usually does not need to be grounded, so it can be compatible with isolated (with transformer) or non-isolated inverters.

① PV modules may appear Potential Induced Degradation (PID) under high humidity, high temperature and high

voltage condition. Modules may appear Potential Induced Degradation (PID) under the conditions below:

◇ PV modules install under hot and humid weather condition.
◇ PV modules installation site is under long-term humid environment such as water floating application.

② To reduce the risk of PID, on the modules DC connection site, it is recommended to connect the negative to ground. The PID protection measures on system level are recommended as follow.

◇ For isolated PV inverter, it is recommended to use the negative electrode potential lift scheme (PV/PE), the AC voltage neutral point potential lift scheme (N/PE) or the reverse bias recovery scheme.
◇ For non-isolated PV inverter, isolated transformer is needed to be equipped before applying virtual grounding method for inverter.

7 Grounding

In design of modules, the anodized corrosion resistant aluminum alloy frame is applied for rigidity support. For safety consideration and to protect modules from lightning and electrostatic damage, the module frame must be grounded. The grounding device must be in full contact with inner side of the aluminum alloy and penetrate surface oxide film of the frame. Do not drill additional grounding holes on module frame.

The grounding conductor or wire may be copper, copper alloy, or any other material acceptable for application as an electrical conductor per respective National Electrical Codes. The grounding conductor must then make a connection to ground with a suitable ground electrode.

There are grounding holes with the diameter of Ø4.2 mm at the edge location of module's back-side frame. The grounding hole on the frame is marked with typical grounding symbol (⏚) according to IEC 61730-1 standard, which can only be used for grounding, not for module installation.

Grounding between modules shall be confirmed by qualified electricians and grounding devices shall be manufactured by qualified electric manufacturer. The copper core wire used for the grounding clamp is recommended to be 12 AWG. And copper wires cannot be pressed during installation in case of damaging.



The following is one of the recommended grounding methods of LONGi modules:

- Align grounding clamp to the frame mounting hole. Use grounding bolt to go through the grounding clamp and frame.
- Put the tooth side of the washer on the other side and fasten the nuts.
- Put grounding wires through the grounding clamp and grounding wire material and dimension shall meet requirements in local national and regional law and regulations.
- Fasten bolts of grounding wires and then installation is completed.

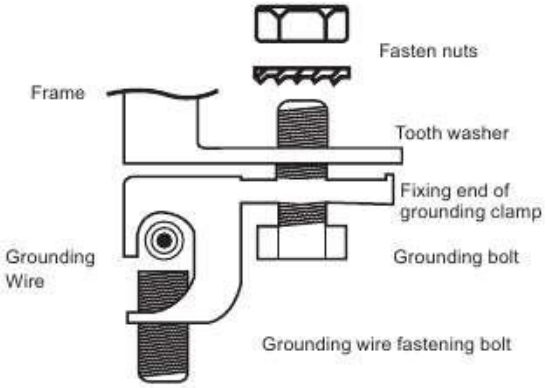

Figure 10 Bolt Grounding Method of PV Module

Mounting holes on modules that are not occupied can be used for installing grounding devices.
The third party grounding device can be used for grounding of LONGi modules but such grounding method shall be proved to be reliable. Grounding device shall be operated in line with stipulations of the manufacturer.

8 Operation and maintenance

It is the users' responsibility to carry out regular inspection and maintenance for modules, especially during the period of limited warranty. To inform the LONGi customer service personnel within two weeks when modules are found broken or other significant abnormality.
Refer to theLONGi PV Module Operation and Maintenance Manualfor details on module maintenance.

8.1 Cleaning

Accumulated contaminants on module surface glass will reduce the power output and lead to local hot spot, such as dust, industrial wasted water and birds' droppings. The severity of influence is determined by transparency of wastes. Small amounts of dust will affect the intensity and evenness of received solar irradiation but are not dangerous and power will not be reduced remarkably generally.



During operation of modules, there shall be no environmental factors to shade modules fully or partially. These environment factors including other modules, module mounting system, birds dwelling, dust, soil or plants. These will significantly reduce output power. LONGi suggests that the module surface should not be shadowed in any case.

Frequency of cleaning depends on dirt accumulation speed. In normal situations, rainwater will clean the module surface and reduce the cleaning frequency. It is suggested to use sponge dipped with clean water or soft cloth to wipe the glass surface. Do not use acid and alkaline detergents to clean modules. Do not use tool with rough surface to clean in any case.

In order to avoid potential risk of electrical shock or burn, LONGi suggests cleaning the modules during early morning or evening with low irradiance and low modules temperature especially for the hot regions.

In order to avoid potential risk of electrical shock, do not try to clean the modules with glass damage or expose wires.

8.2 Module Appearance Inspection

Check module cosmetic defects with naked eyes , especially:

- Module glass cracks. Special attention: avoiding rolling up sand and gravel to break the glass during the inspection of the operation and maintenance vehicles; Avoiding defects or breakage of glass caused by splashing of hard objects such as sand and gravel when using a lawn mower for weeding operations.
- Corrosion at welding parts of the cell main grid (caused by moisture into the module due to damage of sealing materials during installation or transportation).
- Check whether there are traces of burning mark on the module back sheet.
- Check PV modules if any signs of aging including rodent damage, climate aging, connectors tightness, corrosion and grounding condition.
- Check if any sharp objects in contact with PV modules' surface.
- Check if any obstacles shading the PV modules.
- Check if any loose or damage screws between the modules and mounting system. If so, adjust and fix in time.

8.3 Inspection of Connectors and Cables

It is suggested to carry out the following preventive inspection twice a year:

- Check the tightness of the connectors and cables.
- Check if any crack or gap of silicone nearby the junction box.



9 Release and execution

This manual is implemented and managed by product management department of LONGi, who reserves the right to modify and revise this manual in any time without prior notice.



LONGi

www.longi.com